FB Surface Aerators

INTRODUCTION:

A correct design of the biological treatment is fundamental for the success in the fulfillment of the parameters of the WWTP output. In the case of installing **FB surface aerators** at this stage, they will have access to the best compromise between the oxygen transfer required for bacterial respiration and adequate agitation of the reactor, depending on the size of the reactor, since there is a wide range of impellers that can be installed with the same power and flexibility is sought when adapting to reactors that have different aeration volumes under the same power requirements.

In addition, the drive units are selected under strict criteria, bearing in mind the most adverse conditions and always looking for a product durability that experience supports, being available drive options through two-speed motors that allow significant energy savings.

DESCRIPTION:

The **FB surface aerator** is an open type impeller, suitable for working with solids of various sizes. It is basically composed of a tubular shaft, an inverted cone and a certain number of driving blades, which are tangential to the central tubular shaft. The impeller is made of electrowelded steel.

For the selection of the most suitable impeller size for the particular application, the oxygen requirements of the tips and the volume of the aeration chamber must be taken into account.

The **FB surface aerator** is an open type turbine, to be installed on the gangway and with a low speed range, suitable for working without problems in the presence of solids, with differentmodels available. For the selection of the appropriate impeller size, the installed power, the size of the basin and the peripheral speed of the rotor must be taken into account.

The impeller of the aerator, when rotating, evacuates with its blades the existing fluid around it. The evacuated fluid is continuously replaced by the fluid that occupies the base of the aerator,

generating a suction from the bottom of the tank and combining a toroidal and circular movement of the entire liquid mass. In this way, a renewal of the tank surface is achieved, and speed gradients keep the activated sludge in suspension.

The **surface aerator** can be used in all existing activated sludge processes as well as in aerobic sludge digestion. The slower models are especially suitable for use in Carousel type systems, due to the high flow rate provided.

GENERAL DIMENSIONS:

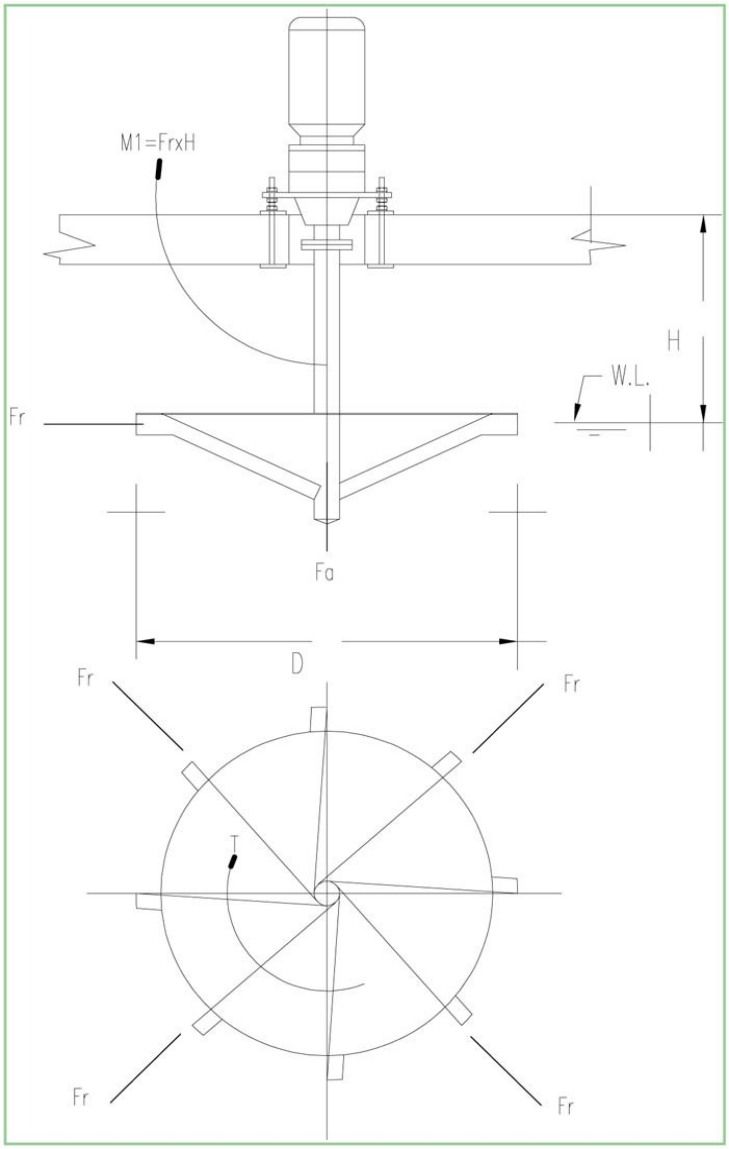

FILTRAMASSA

Especialistas en mecánica de fluidos

Modelo:	Diám. (mm)	H.pala (mm)	Calado min (mm)	Calado max. (mm)	Peso rodete (Kg)
FB-50	1.270	70	1.750	2.600	218
FB-56	1.422	76	2.000	2.900	265
FB-64	1.626	89	2.300	3.300	363
FB-72	1.829	102	2.600	3.700	624
FB-80	2.032	115	2.900	4.100	760
FB-90	2.286	127	3.200	4.600	895
FB-100	2.540	140	3.600	5.100	1.000
FB-112	2.845	158	4.000	5.600	1.425
FB-128	3.251	178	4.500	5.900	1.700
FB-144	3.658	203	5.000	6.100	2.250